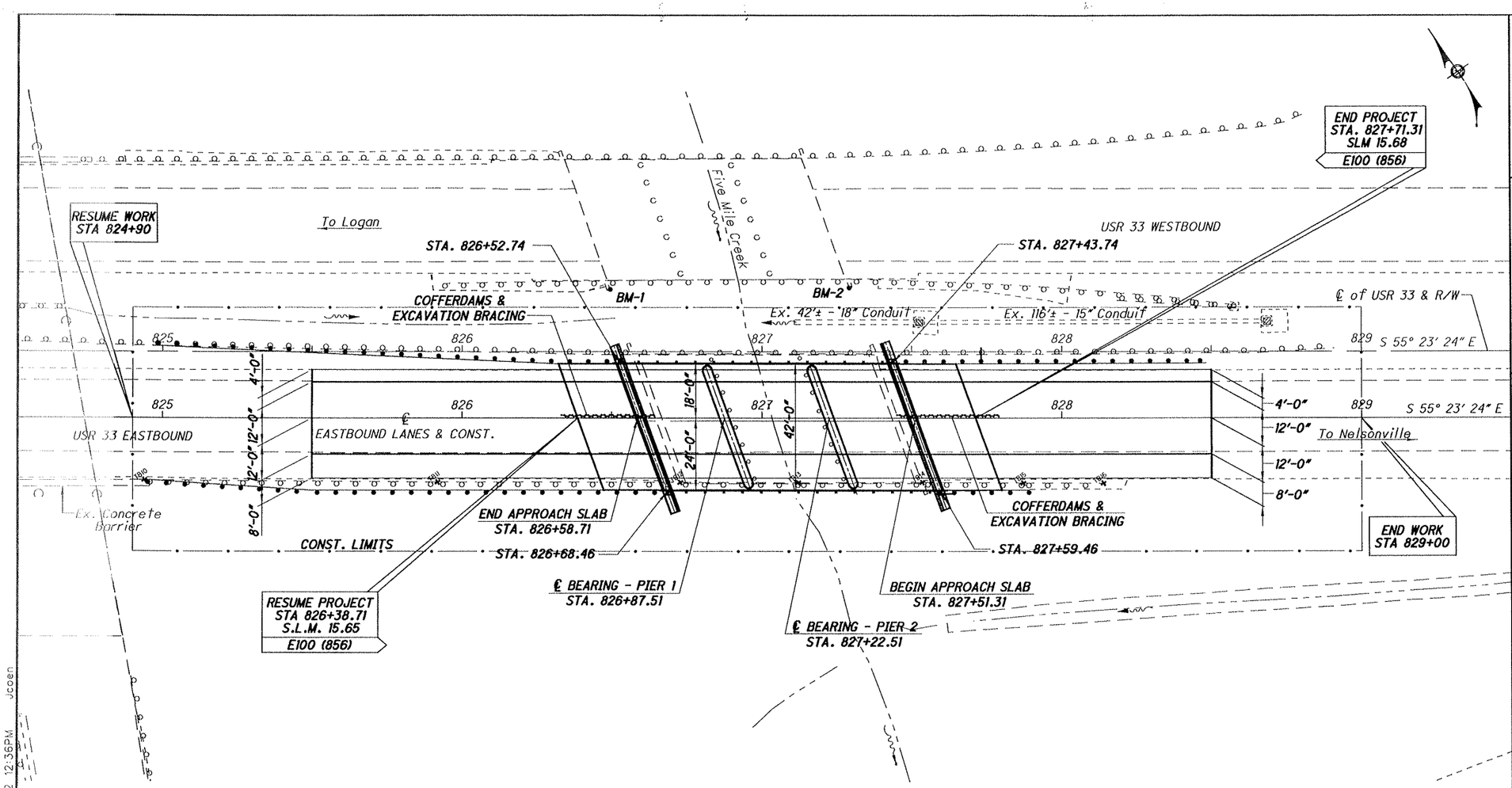

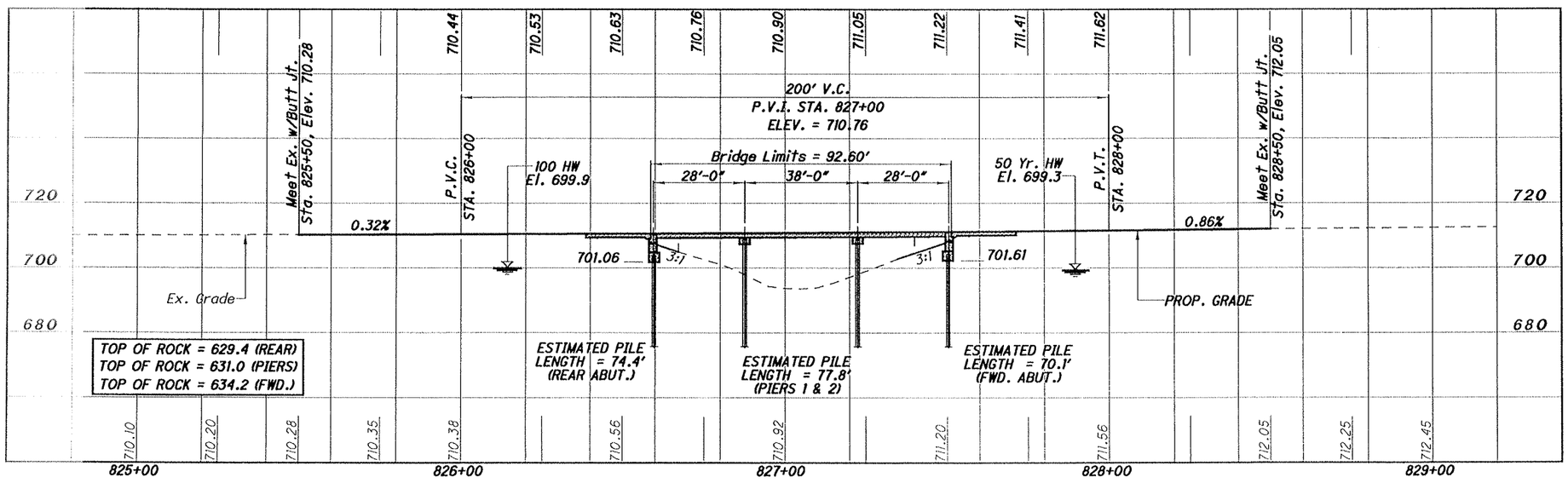

TRAFFIC DATA

CURRENT YEAR
2010 ADT = 15500 2010 ADTT = 1850
DESIGN YEAR
2031 ADT = 18600 2031 ADTT = 2243
DIRECTIONAL DISTRIBUTION = 55%

BENCHMARK

BM-1 - SQUARE CUT SE CORNER OF SW WINGWALL WEST BOUND BRIDGE
STA. 826+49.6524, ELEV. = 709.92, 20.6195' LT.
N543623.753, E2016489.322

BM-2 - SQUARE CUT SW CORNER OF SE WINGWALL WEST BOUND BRIDGE
STA. 827+29.2864, ELEV. = 710.32, 21.1958 LT.
N543578.996, E2016555.191

REFERENCE POINTS

SEE SHEET NUMBER 10 OF 23 FOR CENTERLINE COORDINATES.

HYDRAULIC DATA

(THIS DATA IS FROM THE ORIGINAL PLANS)

DRAINAGE AREA = 5.1 SQ. MILES
Q100 = 1800 C.F.S., V100 = 10.1 F.P.S.
Q50 = 1551 C.F.S., Q25 = 1297 C.F.S,

EXISTING STRUCTURE

TYPE: 3 SPAN CONTINUOUS SLAB WITH CAPPED PILE ABUTMENTS AND PIERS.
SPANS: 24'-30'-24' C/C BEARINGS
ROADWAY: 44' F/F RAILS
SKEW: 20°00'00" RF
APPROACH SLABS: AS-1-54 (20' LONG)
ALIGNMENT: TANGENT
LOADING: CF = 400
CROWN: 0.0156 FT/FT
STRUCTURAL FILE NUMBER: 3700879
DATE BUILT: 1956

PROPOSED STRUCTURE

TYPE: 3 SPAN CONTINUOUS SLAB WITH CAPPED PILE ABUTMENTS AND PIERS.
SPAN: 28'-35'-28' C/C BEARINGS
ROADWAY: 42' F/F RAILS
LOADING: HL-93
SKEW: 20°00'00" R.F.
APPROACH SLABS: 20' LONG (AS-1-81)
ALIGNMENT: TANGENT
CROWN: 0.0156 FT/FT
COORDINATES: LATITUDE 39°15'53"
LONGITUDE 81°41'57"

DESIGN AGENCY
ENGINEERING DEPARTMENT
DISTRICT 10
MARIETTA, OHIO

DATE 7/15/12
REVIEWED JPH
STRUCTURE FILE NUMBER 3700968
DRAWN JDC
REVISED
DESIGNED JDC
CHECKED WAB

HOCKING COUNTY
Sta. 826+58.71
Sta. 827+51.31

SITE PLAN

Bridge No. HOC-33-1513 (Rt.)
Over Five Mile Creek

HOC-33-15.13
PID. No. 87515

1 / 13

11
23

I:\project\HOC-33-15.13\79565\structures\H3315.13Rtsiteplan.dgn 23-NOV-2012 12:36PM Jcoen

PROPOSED WORK

THE PROPOSED WORK INCLUDES REPLACING THE EXISTING STRUCTURE WITH A THREE SPAN CONTINUOUS SLAB BRIDGE.

REFERENCE SHALL BE MADE TO STANDARD DRAWING(S):

REFERENCE SHALL BE MADE TO THE STANDARD DRAWING(S):

AS-1-81	DATED 7-19-02
DS-1-92	DATED 7-18-03
TST-1-99	DATED 4-18-08
CPA-1-08	DATED 7-18-08
CPP-1-08	DATED 7-18-08
PCB-91	DATED 7-19-02
CS-1-08	DATED 7-18-08

AND TO SUPPLEMENTAL SPECIFICATIONS:

832	DATED 5-5-09

DECK PROTECTION METHOD

HIGH PERFORMANCE CONCRETE

EPOXY COATED REINFROCING STEEL - CMS 709.00

SEALING OF CONCRETE SURFACES

STEEL DRIP STRIP

DESIGN SPECIFICATIONS:

THIS STRUCTURE CONFORMS TO "AASHTO LRFD BRIDGE DESIGN SPECIFICATIONS, 4TH EDITION AND INTERIMS" ADOPTED BY THE AMERICAN ASSOCIATION OF STATE HIGHWAY AND TRANSPORTATION OFFICIALS. 2010 SPECIFICATIONS AND THE ODOT BRIDGE DESIGN MANUAL.

DESIGN LOADING:

HL-93

DESIGN DATA:

CLASS C CONCRETE - COMPRESSIVE STRENGTH, 4000 PSI (ABUTMENTS AND PIERS)

CLASS S CONCRETE- COMPRESSIVE STRENGTH, 4500 PSI (DECK)

REINFORCING STEEL - ASTM A615 OR A996, GRADE 60 MINIMUM YIELD STRENGTH, 60,000 PSI, (EPOXY COATED)

CLASS S CONCRETE, SUPERSTRUCTURE, AS PER PLAN

FALSE WORK FOR PHASE 1 CONSTRUCTION SHALL BE DESIGNED TO SUPPORT HL-93 LIVE LOADING. THIS SUPPORT SYSTEM SHALL REMAIN IN PLACE UNTIL CONSTRUCTION OF PHASE 2 IS COMPLETE.

PAYMENT FOR THIS WORK SHALL BE INCLUDED IN ITEM 511- CLASS S CONCRETE, AS PER PLAN AND SHALL INCLUDE ALL COST ASSOCIATED WITH THIS ITEM.

UTILITY LINES:

ALL EXPENSES OF RELOCATING (INSTALLING) THE AFFECTED UTILITY LINES SHALL BE BORNE BY THE UTILITY (IES). THE CONTRACTOR AND UTILITY (IES) ARE TO COOPERATE BY ARRANGING THEIR WORK IN SUCH A MANNER THAT INCONVENIENCE TO EITHER WILL BE HELD TO A MINIMUM.

EXISTING STRUCTURE VERIFICATION

DETAILS AND DIMENSIONS SHOWN ON THESE PLANS PERTAINING TO THE EXISTING STRUCTURE HAVE BEEN OBTAINED FROM PLANS OF THE EXISTING STRUCTURE AND FROM FIELD OBSERVATIONS AND MEASUREMENTS. CONSEQUENTLY, THEY ARE INDICATIVE OF THE EXISTING STRUCTURE AND THE PROPOSED WORK BUT THEY SHALL BE CONSIDERED TENTATIVE AND APPROXIMATE. THE CONTRACTOR IS REFERRED TO CMS SECTIONS 102.05 AND 105.02.

CONTRACT BID PRICES SHALL BE BASED UPON A RECOGNITION OF THE UNCERTAINTIES DESCRIBED ABOVE AND UPON A PREBID EXAMINATION OF THE EXISTING STRUCTURE BY THE CONTRACTOR, HOWEVER, ALL PROJECT WORK SHALL BE BASED UPON ACTUAL DETAILS AND DIMENSIONS WHICH HAVE BEEN VERIFIED BY THE CONTRACTOR IN THE FIELD.

MONOLITHIC WEARING SURFACE

MONOLITHIC WEARING SURFACE IS ASSUMED, FOR DESIGN PURPOSES, TO BE 1" THICK

PILES TO BEDROCK

PILES TO BEDROCK: DRIVE PILES TO REFUSAL ON BEDROCK. THE DEPARTMENT WILL CONSIDER REFUSAL TO BE OBTAINED BY PENETRATING SOFT BEDROCK FOR SEVERAL INCHES TO A MINIMUM RESISTANCE OF 20 BLOWS PER INCH OR BY CONTACTING HARD BEDROCK AND THE PILE RECEIVING AT LEAST 20 BLOWS. SELECT THE HAMMER SIZE TO ACHIEVE THE REQUIRED DEPTH TO BEDROCK AND REFUSAL. FOR PILE INFORMATION SEE DETAIL SHEEETS.

CONSTRUCTION JOINTS

CONSTRUCTION JOINTS SHALL HAVE ROUGH SURFACES. PRIOR TO CONCRETE PLACEMENT, ALL CONCRETE BONDING SURFACES SHALL BE THOROUGHLY CLEANED OF ALL DIRT, DUST, OR OTHER FOREIGN MATERIAL BY THE USE OF WATER, AIR UNDER PRESSURE, OR OTHER METHOD THAT PRODUCES RESULTS SATISFACTORY TO THE ENGINEER. CARE SHALL BE TAKEN TO PROTECT EPOXY COATING ON EXPOSED REINFORCEMENT DURING CLEANING. BONDING SURFACES SHALL BE WET WITHOUT FREE WATER AS CONCRETE IS PLACED.

ITEM SPECIAL - PILE ENCASEMENT

ITEM SPECIAL - PILE ENCASEMENT:
ENCASE ALL STEEL H-PILES FOR THE CAPPED PILE PIERS IN CLASS C CONCRETE. PROVIDE A CONCRETE SLUMP BETWEEN 6 TO 8 INCHES WITH THE USE OF A SUPERPLASTICIZER. PLACE THE CONCRETE WITHIN A FORM THAT CONSISTS OF POLYETHYLENE PIPE (707.33), OR PVC PIPE (707.42). THE ENCASEMENT SHALL EXTEND FROM 3 FEET BELOW THE FINISHED GROUND SURFACE UP TO THE CONCRETE PIER CAP. POSITION THE PIPE SO THAT AT LEAST 3 INCHES OF CONCRETE COVER IS PROVIDED AROUND THE EXTERIOR OF THE PILE.

THE DEPARTMENT WILL MEASURE PILE ENCASEMENT BY THE NUMBER OF FEET. THE DEPARTMENT WILL DETERMINE THE SUM AS THE LENGTH MEASURED ALONG THE AXIS OF EACH PILE FROM THE BOTTOM OF THE ENCASEMENT TO THE BOTTOM OF THE PIER CAP. THE DEPARTMENT WILL NOT PAY FOR ENCASEMENT PROVIDED BEYOND THE PROJECT REQUIREMENTS. THE DEPARTMENT WILL PAY FOR ACCEPTED QUANTITIES AT THE CONTRACT PRICE FOR: ITEM - SPECIAL, PILE ENCASEMENT.

ESTIMATED QUANTITIES (PARTICIPATION CODE 02/BRO/BR)

ITEM	ITEM EXT.	GRAND TOTAL	UNIT	DESCRIPTION	ABUT.	PIERS	SUPER-STRU.	GRNL
202	11003	LUMP		STRUCTURE REMOVED, OVER 20 FOOT SPAN, AS PER PLAN				
503	11100	LUMP		COFFERDAMS AND EXCAVATION BRACING				
503	21300	LUMP		UNCLASSIFIED EXCAVATION				
505	11100	LUMP		PILE DRIVING EQUIPMENT MOBILIZATION				
507	00100	1395	FT	STEEL PILES HP10x42, FURNISHED	1395			
507	00150	1305	FT	STEEL PILES HP10x42, DRIVEN	1305			
507	00200	1190	FT	STEEL PILES HP12x53, FURNISHED		1190		
507	00250	1120	FT	STEEL PILES HP12x53, DRIVEN		1120		
SPECIAL	50771200	175	FT	SPECIAL-PILE ENCASEMENT		175		
507	93301	32	EA	STEEL POINTS OR SHOES, AS PER PLAN	18	14		
509	10000	63640	LBS	EPOXY COATED REINFORCING STEEL	12145	2777	48718	
511	32201	228	CY	CLASS S CONCRETE, SUPERSTRUCTURE, AS PER PLAN			228	
511	42500	20.3	CY	CLASS C CONCRETE, PIER CAP		20.3		
511	45500	78	CY	CLASS C CONCRETE, ABUTMENT	78			
512	10050	167	SY	SEALING OF CONCRETE SURFACES, (NON-EPOXY)	70	40	57	
512	44400	40	SY	TYPE B WATERPROOFING	40			
516	13200	72	SF	1/2" PREFORMED EXPANSION JOINT FILLER	72			
516	13600	94	SF	1" PREFORMED EXPANSION JOINT FILLER	94			
517	70000	191.83	FT	RAILING (TWIN STEEL TUBE)			191.83	
518	21200	69	CY	POROUS BACKFILL WITH FILTER FABRIC	69			
SPECIAL	51822300	223	FT	SPECIAL - STEEL DRIP STRIP			223	
518	40000	118	FT	6" PERFORATED CORRUGATED PLASTIC PIPE	118			
518	40010	160	FT	6" NON-PERFORATED CORRUGATED PLASTIC PIPE, INCLUDING SPECIALS	160			
526	15000	187	SY	REINFORCED CONCRETE APPROACH SLAB (T=13")				187

DESIGN AGENCY: ENGINEERING DEPARTMENT DISTRICT 10 MARIETTA, OHIO

DESIGNED JDC | DRAWN JDC | CHECKED WAB | REVISED | REVIEWED JPH | DATE 7/15/12 | STRUCTURE FILE NUMBER 3700968

STRUCTURAL NOTES AND ESTIMATED QUANTITIES

Bridge No. HOC-33-1513 (RT.)
Over Five Mile Creek

HOC-33-15.13
PID No. 87515

2 / 13

12 / 23

I:\project\HOC-33-15.13\79565\structures\RIGHTABUTMENT.dgn 23-NOV-2012 12:35PM Jcoen

PILES TO BEDROCK

PILES TO BEDROCK: DRIVE PILES TO REFUSAL ON BEDROCK. THE DEPARTMENT WILL CONSIDER REFUSAL TO BE OBTAINED BY PENETRATING SOFT BEDROCK FOR SEVERAL INCHES TO A MINIMUM RESISTANCE OF 20 BLOWS PER INCH OR BY CONTACTING HARD BEDROCK AND THE PILE RECEIVING AT LEAST 20 BLOWS. SELECT THE HAMMER SIZE TO ACHIEVE THE REQUIRED DEPTH TO BEDROCK AND REFUSAL. THE TOTAL FACTORED LOAD IS 84.5 KIPS PER PILE FOR THE ABUTMENT PILES.
THE TOTAL FACTORED LOAD IS 151.3 KIPS PER PILE FOR THE PIER PILES.

ABUTMENT PILES:
HP10X42 PILES 80 FEET LONG, ORDER LENGTH (REAR ABUTMENT)
HP10X42 PILES 75 FEET LONG, ORDER LENGTH (FWD. ABUTMENT)

PIER PILES:
HP12X53 PILES 85 FEET LONG, ORDER LENGTH

PILE SPLICES

PILE SPLICES: IN LIEU OF USING THE FULL PENETRATION BUTT WELDS SPECIFIED IN CMS 507.09 TO SPLICE STEEL H-PILES, THE CONTRACTOR MAY USE A MANUFACTURED H-PILE SPLICER. FURNISH SPLICERS FROM THE FOLLOWING MANUFACTURER:

ASSOCIATED PILE AND FITTING CORPORATION
262 RUTHERFORD BLVD.
CLIFTON, NEW JERSEY 07014

INSTALL AND WELD THE SPLICER TO THE PILE SECTIONS IN ACCORDANCE WITH THE MANUFACTURER$\frac{5}{32}$S WRITTEN ASSEMBLY PROCEDURE SUPPLIED TO THE ENGINEER BEFORE THE WELDING IS PERFORMED.

ITEM 507, STEEL POINTS, AS PER PLAN

ITEM 507, STEEL POINTS, AS PER PLAN: USE STEEL PILE POINTS TO PROTECT THE TIPS OF THE PROPOSED STEEL "H" PILING. FURNISH STEEL POINTS FROM THE FOLLOWING MANUFACTURES/SUPPLIERS: ASSOCIATEDPILE AND FITTING CORPORATION, 262 RUTHERFORD BLVD., CLIFTON, NEW JERSEY 07014, PHONE: (973)773-8400, (800)526-9047, FAX: (973)773-8442; INTERNATIONAL CONSTRUCTION EQUIPMENT, INC., 301 WAREHOUSE DRIVE, MATTHEWS, NORTH CAROLINA 28015, PHONE: (704)821-8200, (888)423-8721, FAX: (704)821-8201; DOUGHERTY FOUNDATION PRODUCTS, INC., P.O. BOX 688, FRANKLIN LAKES, NEW JERSEY 07417, PHONE: (201)337-5748, FAX: (201)337-9022; VERSA STEEL INC., 1618 N.E. FIRST AVE., PORTLAND, OREGON 97232, PHONE: (503)287-9822, (800)678-0814, FAX: (503)287-7483; VERSABITE PILING ACCESSORIES, 1704 TOWER INDUSTRIAL DR., MONROE, NORTH CAROLINA 28110, PHONE: (800)280-9950, (704)225-1566, FAX: (704)225-1567; OR BY A MANUFACTURER THAT CAN FURNISH A STEEL POINT THAT IS ACCEPTABLE TO DIRECTOR. THE MATERIAL USED FOR THE MANUFACTURING OF PILE POINTS SHALL CONFORM TO ASTM A27/A27M 65/35 [450/240] - CLASS 2 - HEAT TREATED OR AASHTO M103/M103M 65/35 [450/240] - HEAT TREATED. WELD THE PILE POINTS TO THE PILE IN ACCORDANCE WITH AWS D1.5 OR THE MANUFACTURER'S WRITTEN WELDING PROCEDURE SUPPLIED TO THE ENGINEER BEFORE THE WELDING IS PERFORMED. SUBMIT A NOTARIZED COPY OF THE MILL TEST REPORT TO THE ENGINEER.

STRUCTURE REMOVED, OVER 20' SPAN, AS PER PLAN

THIS WORK SHALL INCLUDE COMPLETE REMOVAL OF THE EXISTING DECK, ABUTMENTS, FOOTINGS, PIERS, APPROACH SLABS, THE GUARDRAIL ATTACHED TO THE STRUCTURE AND ANY OTHER ITEMS ATTACHED TO THE STRUCTURE NOT SPECIFICALLY MENTIONED.

PAYMENT: THIS WORK WILL BE PAID FOR AT THE CONTRACT LUMP SUM PRICE BID FOR ITEM 202 - STRUCTURE REMOVED, OVER 20 FOOT SPAN, AS PER PLAN. PRICE AND PAYMENT SHALL BE FULL COMPENSATION FOR ALL LABOR, EQUIPMENT, MATERIALS AND INCIDENTALS NECESSARY TO COMPLETE THE WORK IN CONFORMANCE WITH THESE REQUIREMENTS, WITH PERTINENT PROVISIONS OF 202 AND TO THE SATISFACTION OF THE ENGINEER.

SEALING WITH HMWM RESIN

AFTER DECK SLAB CONCRETE HAS BEEN DRY-AIR CURED FOR NOT LESS THAN 7 DAYS, AND IMMEDIATELY AFTER A MINIMUM 48 HOUR PERIOD WITHOUT PRECIPITATION, VERTICAL CONSTRUCTION JOINTS IN THE DECK SLAB, HORIZONTAL JOINTS AT AND ADJACENT TO THE ROADWAY SURFACE (AT THE BASE OF SIDEWALKS, CURBS, BARRIERS, ETC.), AND CRACKS IN THE ROADWAY SURFACE THAT ARE VISIBLE TO THE UNAIDED EYE, SHALL BE SEALED WITH A HIGH MOLECULAR WEIGHT METHACRYLATE (HMWM) RESIN AS DESCRIBED IN THE 2008 SUPPLEMENTAL SPECIFICATIONS. SEALANT SHALL BE APPLIED BY BRUSH, SPRAY OR OTHER SUITABLE APPLICATION ALONG THE SURFACE OF JOINTS AND CRACKS. IF NECESSARY, MULTIPLE APPLICATIONS SHALL BE MADE UNTIL COMPLETE PENETRATION HAS BEEN ACHIEVED. AFTER SEALANT HAS BEEN CURED, IT SHALL BE SANDED AS SPECIFIED TO ROUGHEN THE SEALANT SURFACE AND RESTORE ITS SUITABILITY FOR VEHICULAR TRAFFIC. FOR OVERCOATING WITH A CONCRETE SURFACE SEALANT OR AS PREPARATION FOR A CONCRETE OVERLAY, TREATED SURFACES SHALL BE ROUGHENED BY ABRASIVE BLASTING AND OTHERWISE CLEANED AS SPECIFIED FOR THE SUBSEQUENT APPLICATION. SEALING CONSTRUCTION JOINTS AND CRACKS AS DESCRIBED ABOVE SHALL BE INCLUDED WITH THE DECK SLAB CONCRETE FOR PAYMENT.

I:\project\HOC-33-15.13\79565\structures\RIGHTABUTMENT.dgn 23-NOV-2012 9:13AM jcoen

DESIGN AGENCY
ENGINEERING DEPARTMENT
DISTRICT 10
MARIETTA, OHIO

DESIGNED	DRAWN	REVIEWED	DATE
JDC	JDC	JPH	7/15/12
CHECKED	REVISED	STRUCTURE FILE NUMBER	
WAB		3700968	

STRUCTURAL NOTES

Bridge No. HOC-33-1513 (RT.)
Over Five Mile Creek

HOC-33-15.13
PID No. 87515

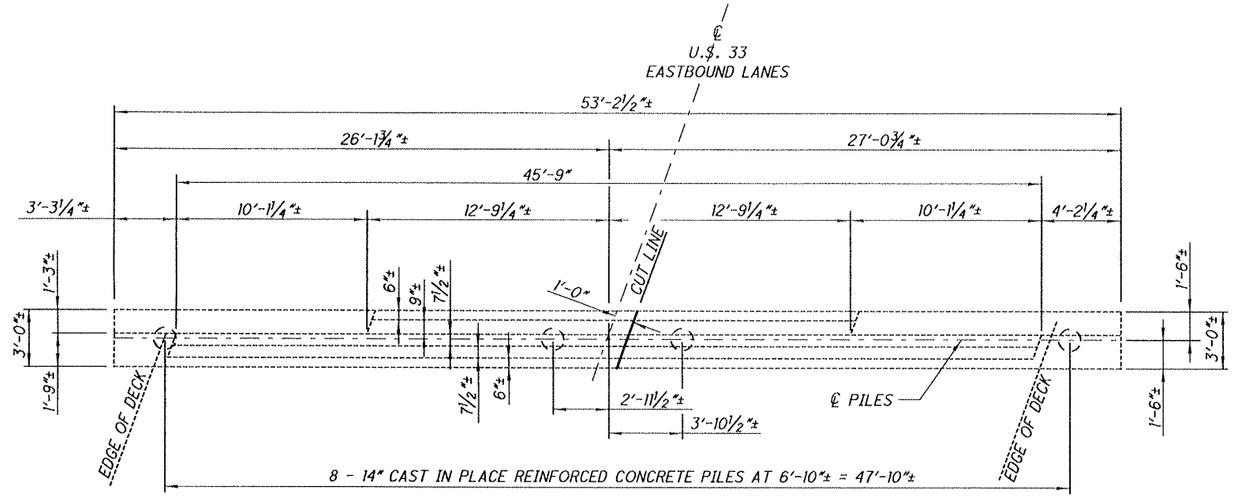

Plan

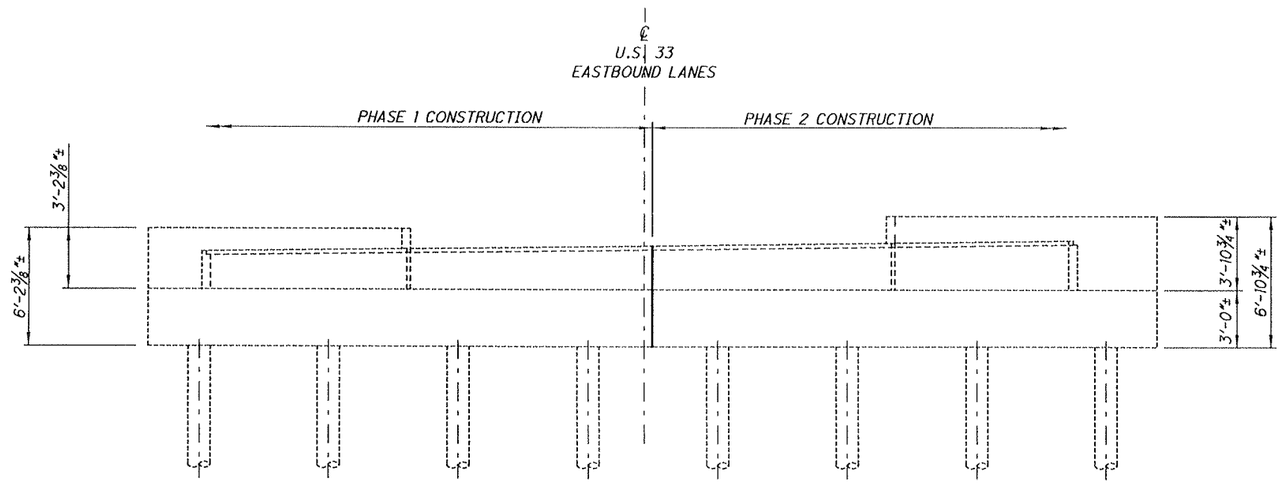

Elevation

DESIGN AGENCY
ENGINEERING DEPARTMENT
DISTRICT 10
MARIETTA, OHIO

DESIGNED	DRAWN	REVIEWED	DATE
JDC	JDC	JPH	7/15/12
CHECKED	REVISED	STRUCTURE FILE NUMBER	
WAB		3700968	

REAR ABUTMENT REMOVAL

Bridge No. HOC-33-15.13 (RT.)
Over Five Mile Creek

HOC-33-15.13

PID No. 87515

4 / 13

14 / 23

F:\Project\HOC-33-15.13\79565\structures\RIGHTABUTMENT.dgn 23-NOV-2012 9:12AM Jcoen

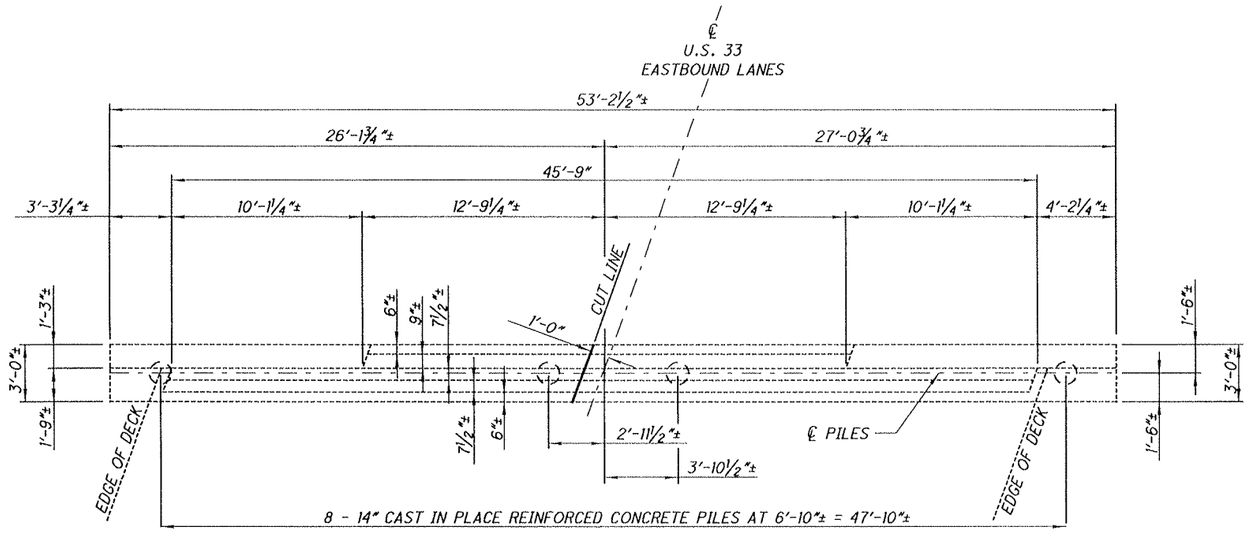

Plan

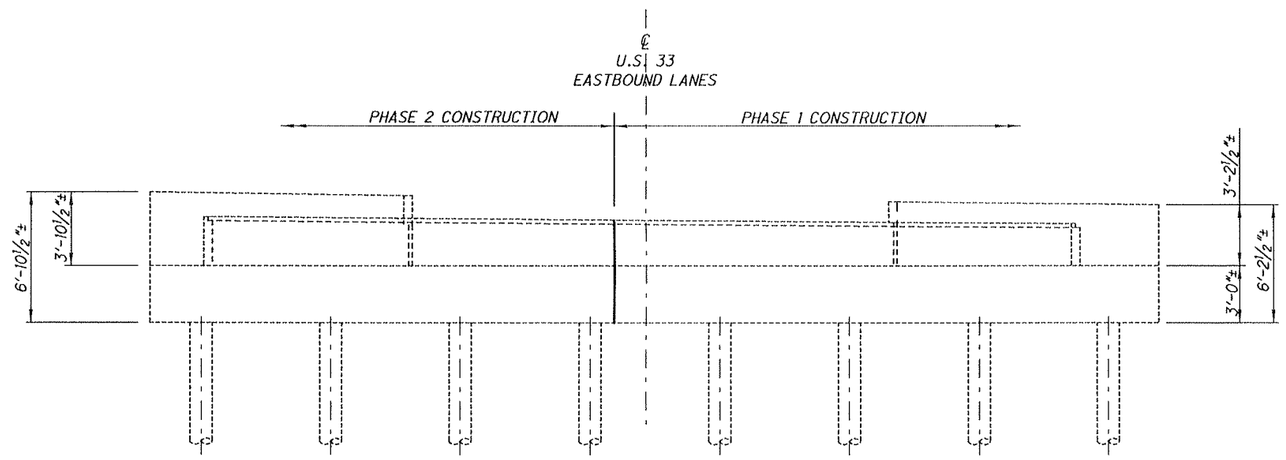

Elevation

DESIGN AGENCY
ENGINEERING DEPARTMENT
DISTRICT 10
MARIETTA, OHIO

DESIGNED	DRAWN	REVIEWED	DATE
JDC	JDC	JPH	7/15/12
CHECKED	REVISED	STRUCTURE FILE NUMBER	
WAB		37000968	

FORWARD REMOVAL DETAILS

Bridge No. HOC-33-1513 (Rt.)
Over Five Mile Creek

HOC-33-15.13
PID No. 87515

5 / 13

15 / 23

I:\project\HOC-33-15.13\79565\structures\RIGHTABUTMENT.dgn 23-NOV-2012 9:12AM Jcoen

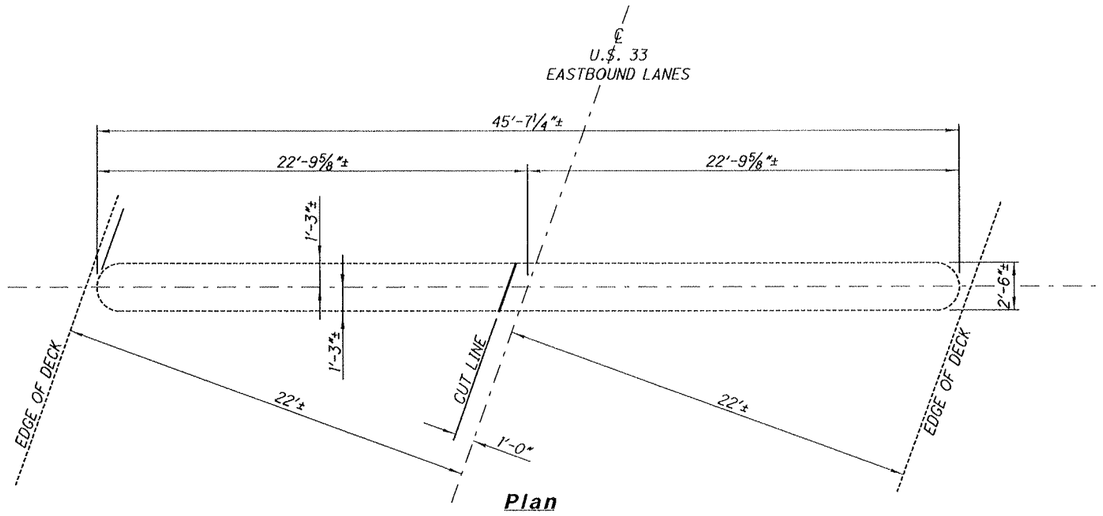

Plan

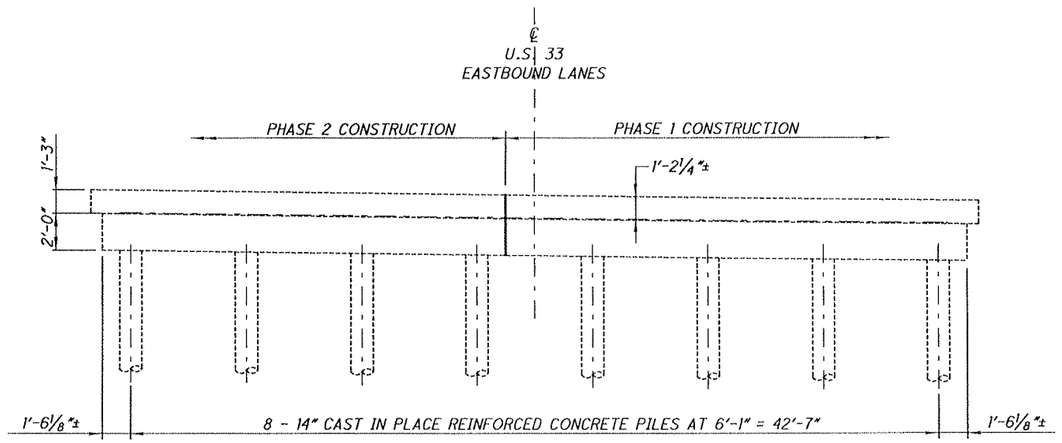

Elevation

DESIGN AGENCY
ENGINEERING DEPARTMENT
DISTRICT 10
MARIETTA, OHIO

DESIGNED	DRAWN	REVIEWED	DATE
JDC	JDC	JPH	7/15/12
CHECKED	REVISED	STRUCTURE FILE NUMBER	
WAB		3700966	

PIER REMOVAL DETAILS

Bridge No. HOC-33-1513 (RT.)
Over Five Mile Creek

HOC-33-15.13
PID No. 87515

6 / 13

16
23

i:\project\HOC-33-15.13\78565\structures\RIGHTABUTMENT.dgn 23-NOV-2012 9:13AM Jcoen

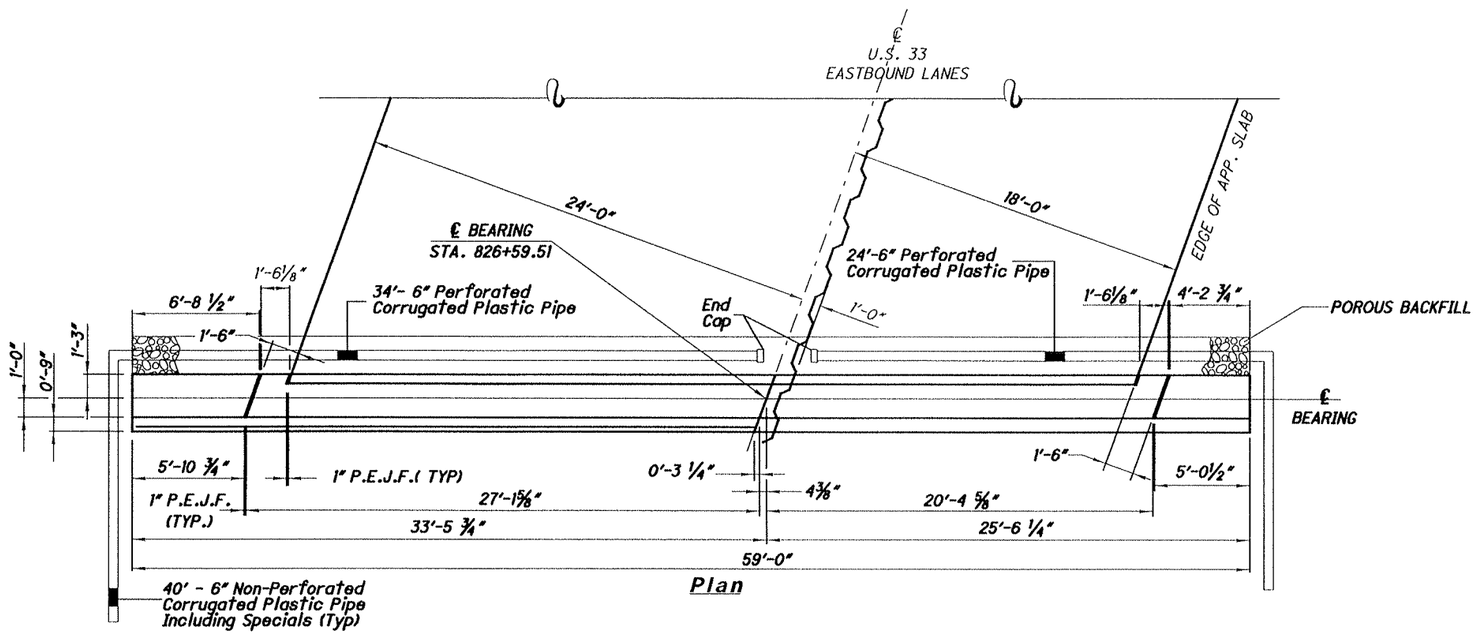

Note:

1. ALL REINFORCEMENT SHALL HAVE 2" CLEARANCE EXCEPT AS NOTED
   * - OPTIONAL CONSTRUCTION JOINT
   SPA. - SPACE
   EF. - EACH FACE
   NF. - NEAR FACE
   FF. - FAR FACE
2. FOR APPROACH SLAB DETAILS NOT SHOWN, SEE AS-1-81
3. PEJF - PREFORMED EXPANSION JOINT FILLER
4. S501, S502 AND S503 BARS ARE PLACED PARALLEL TO ℄
5. SEE SHEET 9 OF 13 FOR SECTIONS A-A AND B-B

DESIGN AGENCY
ENGINEERING DEPARTMENT
DISTRICT 10
MARIETTA, OHIO

DESIGNED	DRAWN	REVIEWED	DATE
JDC	JDC	JPH	7/15/12
CHECKED	REVISED	STRUCTURE FILE NUMBER	
WAB		3700968	

REAR ABUTMENT DETAILS

Bridge No. HOC-33-1513 (Rt.)
Over Five Mile Creek

HOC-33-15.13
PID No. 87515

7 / 13

17 / 23

I:\project\HOC-33-15.13\79565\structures\RIGHTABUTMENT.dgn 23-NOV-2012 9:12AM Jcoen

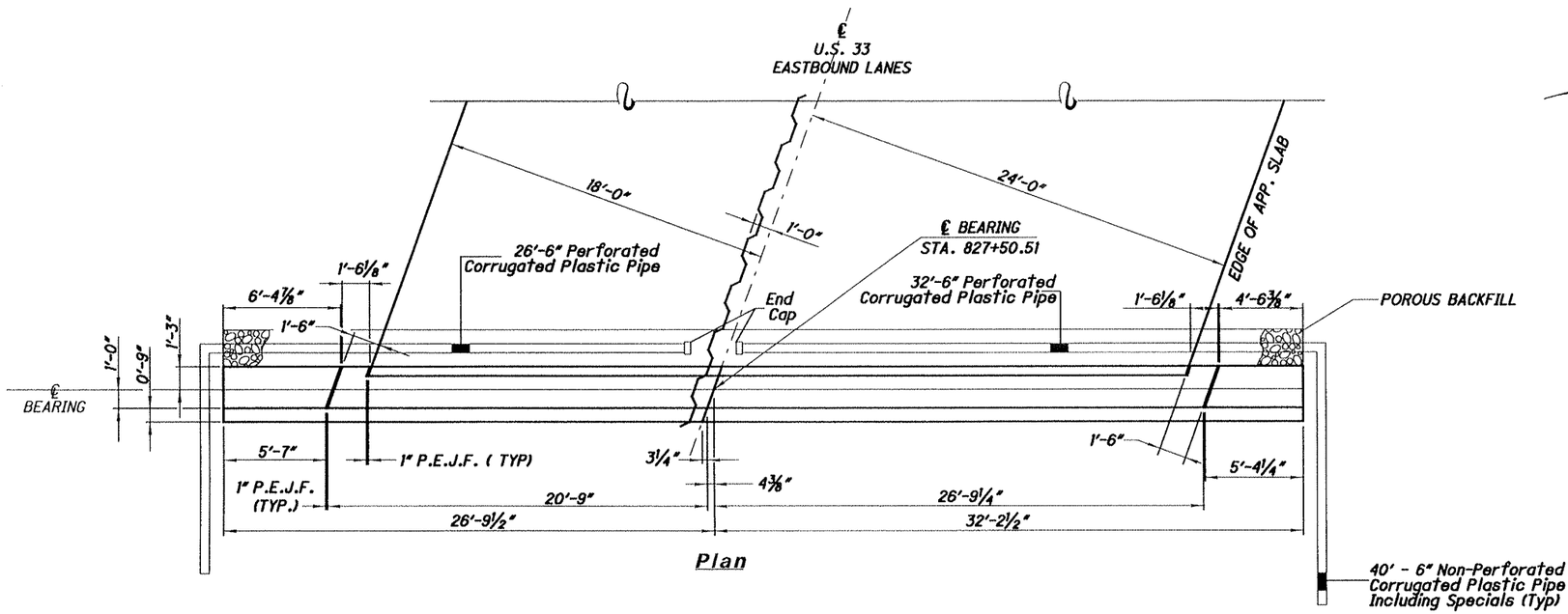

Plan

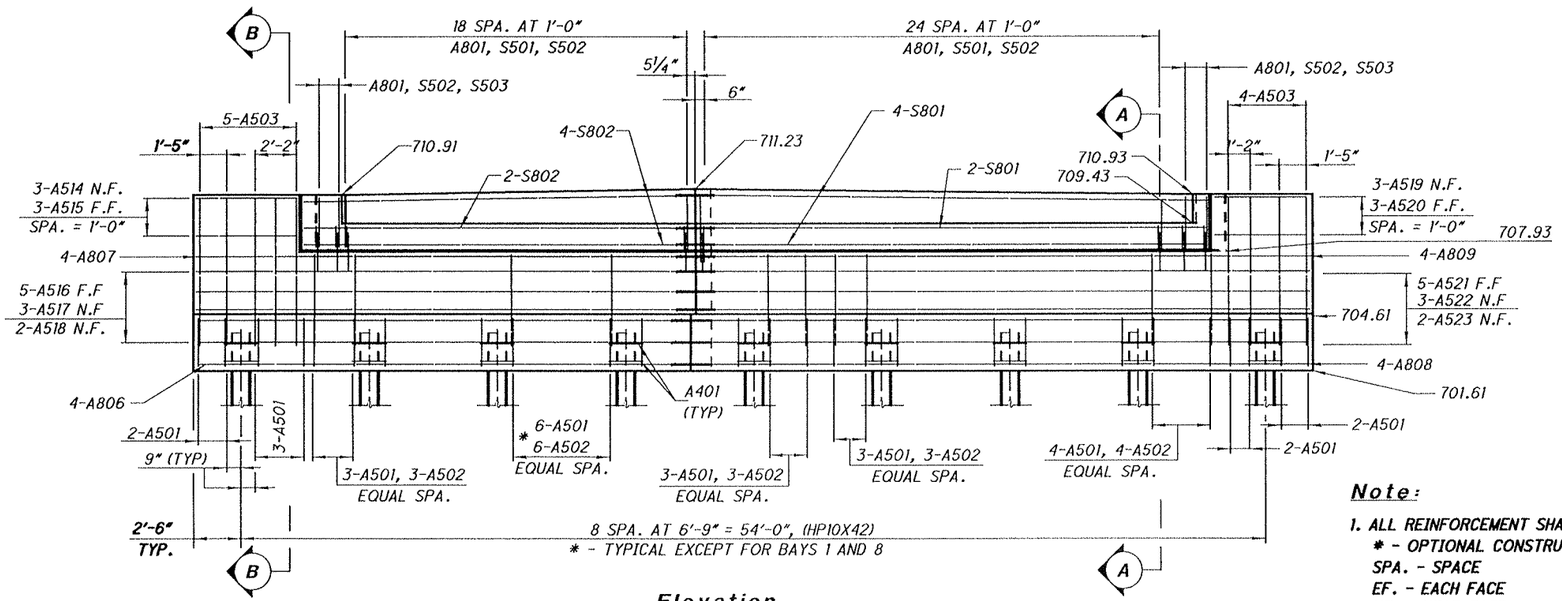

Elevation

Note:

1. ALL REINFORCEMENT SHALL HAVE 2" CLEARANCE EXCEPT AS NOTED
   * - OPTIONAL CONSTRUCTION JOINT
   SPA. - SPACE
   EF. - EACH FACE
   NF. - NEAR FACE
   FF. - FAR FACE
2. FOR APPROACH SLAB DETAILS NOT SHOWN, SEE AS-1-81
3. PEJF - PREFORMED EXPANSION JOINT FILLER
4. S501, S502 AND S503 BARS ARE PLACED PARALLEL TO ℄
5. SEE SHEET 9 OF 13 FOR SECTIONS A-A AND B-B

DESIGN AGENCY
ENGINEERING DEPARTMENT
DISTRICT 10
MARIETTA, OHIO

DESIGNED	DRAWN	REVIEWED	DATE
JDC	JDC	JPH	7/15/12
CHECKED	REVISED	STRUCTURE FILE NUMBER	
WAB		3700968	

FWD. ABUTMENT DETAILS

Bridge No. HOC-33-1513 (Rt.)
Over Five Mile Creek

HOC-33-15.13
PID No. 87515

8 / 13

18
23

i:\project\HOC-33-15.13\79565\structures\RIGHTABUTMENT.dgn 23-NOV-2012 9:13AM Jcoen

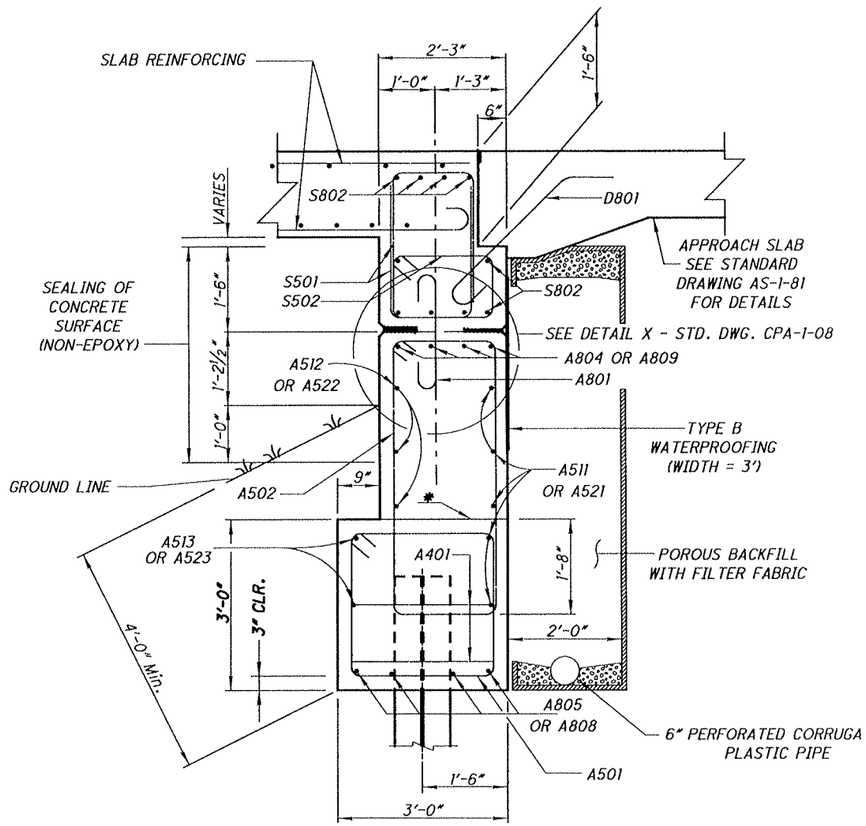

SECTION A-A

APPROACH SLAB REINFORCING NOT SHOWN FOR CLARITY

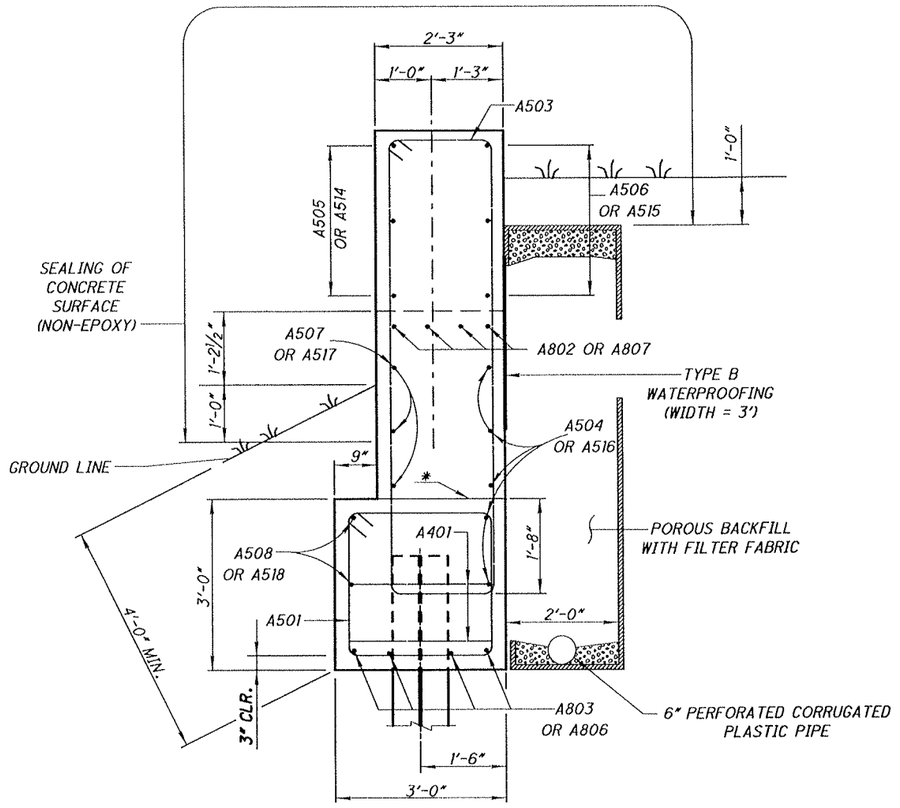

SECTION B-B

POROUS BACKFILL WITH FILTER FABRIC

POROUS BACKFILL WITH FILTER FABRIC, 2 FEET THICK SHALL EXTEND UP TO THE PLANE OF THE SUBGRADE, TO 1 FOOT BELOW THE EMBANKMENT SURFACE, AND LATERALLY TO THE ENDS OF THE WINGWALLS.

NOTE:

S501, S502 AND S503 BARS ARE PLACED PARALLEL TO ℄

* - OPTIONAL CONSTRUCTION JOINT

DESIGN AGENCY
ENGINEERING DEPARTMENT
DISTRICT 10
MARIETTA, OHIO

DESIGNED	DRAWN	REVIEWED	DATE
JDC	JDC	JPH	07-15-12
CHECKED	REVISED	STRUCTURE FILE NUMBER	
MAB		3700568	

ABUTMENT DETAILS

Bridge No. HOC-33-1513 (Rt.)
Over Five Mile Creek

HOC-33-15.13
PID No. 87515

9 / 13

19
23

I:\project\HOC-33-15.13\79565\structures\RIGHTABUTMENT.dgn 23-NOV-2012 9:13AM Jcoen

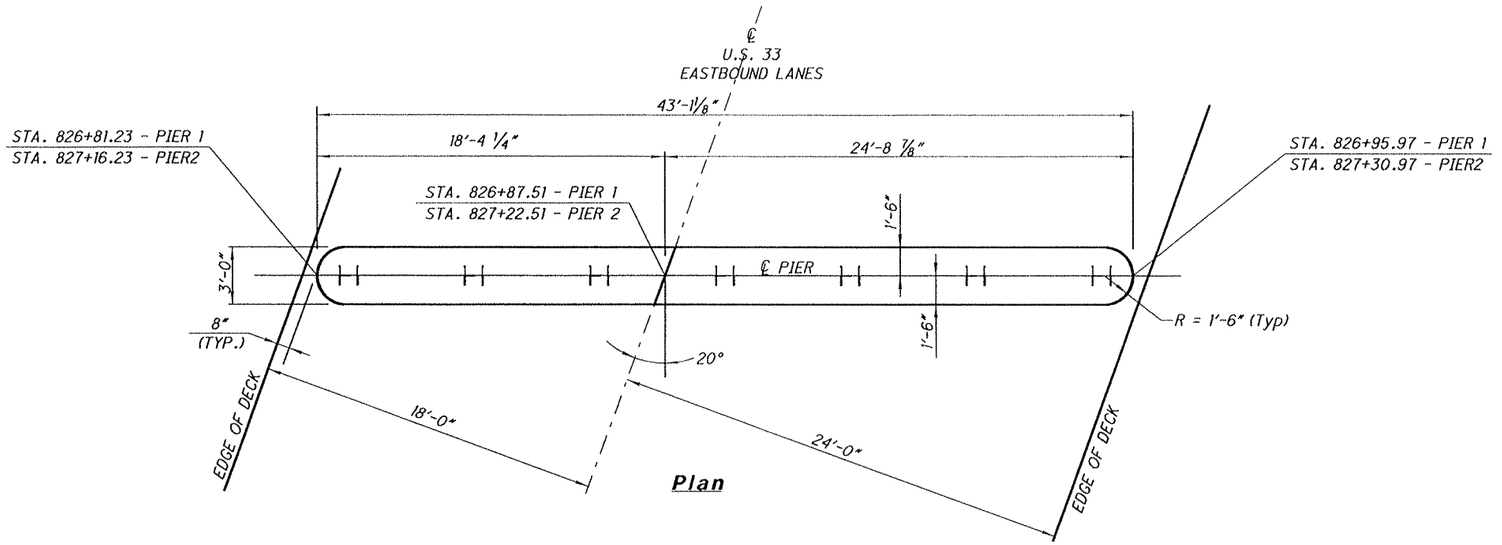

Plan

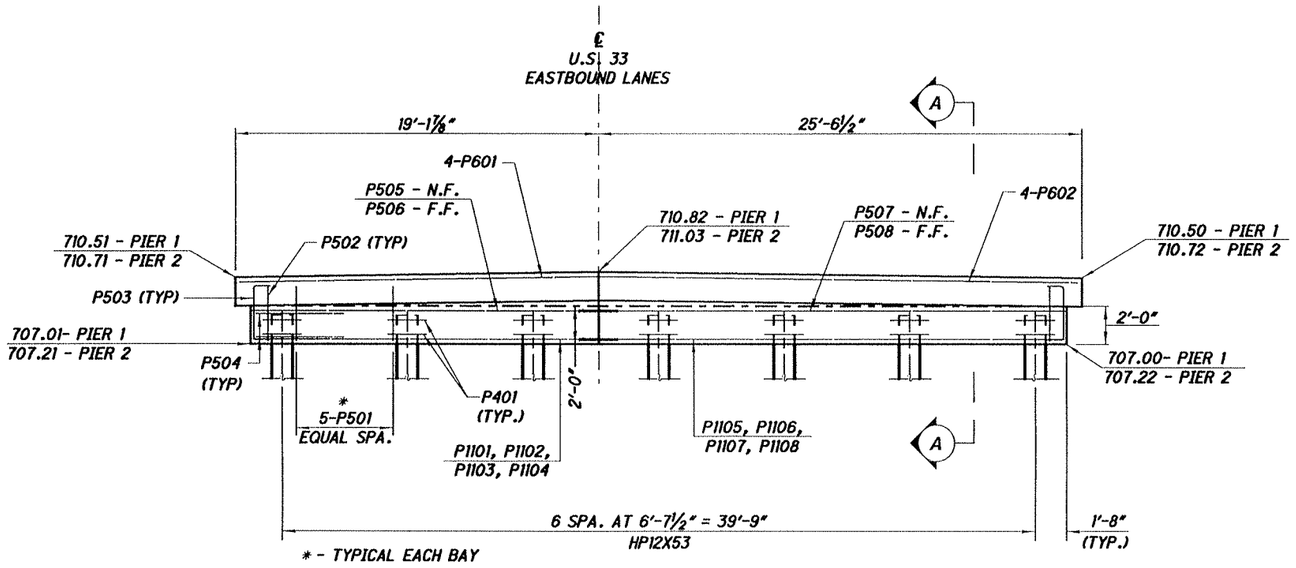

Elevation

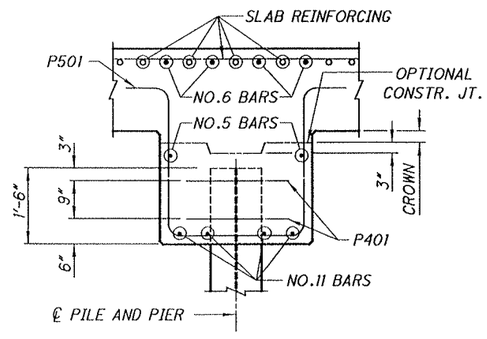

SECTION A-A

DESIGN AGENCY
ENGINEERING DEPARTMENT
DISTRICT 10
MARIETTA, OHIO

DESIGNED	DRAWN	REVIEWED	DATE
JDC	JDC	JPH	1/15/12
CHECKED	REVISED	STRUCTURE FILE NUMBER	
WAB		3700968	

PIER DETAILS
Bridge No. HOC-33-1513 (Rt.)
Over Five Mile Creek

HOC-33-15.13
PID No. 87515

10 / 13

20 / 23

I:\project\HOC-33-15.13\79565\structures\RIGHTABUTMENT.dgn 23-NOV-2012 9:13AM Jcoen

NOTES:

1. SPA -SPACING
2. SEE SHEET 22 OF 23 FOR SECTION A-A, B-B & C-C
3. SEE STANDARD DRAWING CS-1-08 FOR FURTHER DETAILS
4. S401 BARS SHALL NOT BE LAPPED WITH THE ADDITIONAL S601-BARS PROVIDED AT THE ABUTMENTS AND PIERS.
5. MIN. LAP SPLICE FOR: #4 BAR = 36", #5 BAR = 42", #8 BAR = 81".
6. REINFORCING STEEL IN TRANSVERSE DIRECTION SHALL BE PLACED PARALLEL TO SUBSTRUCTURE UNITS.

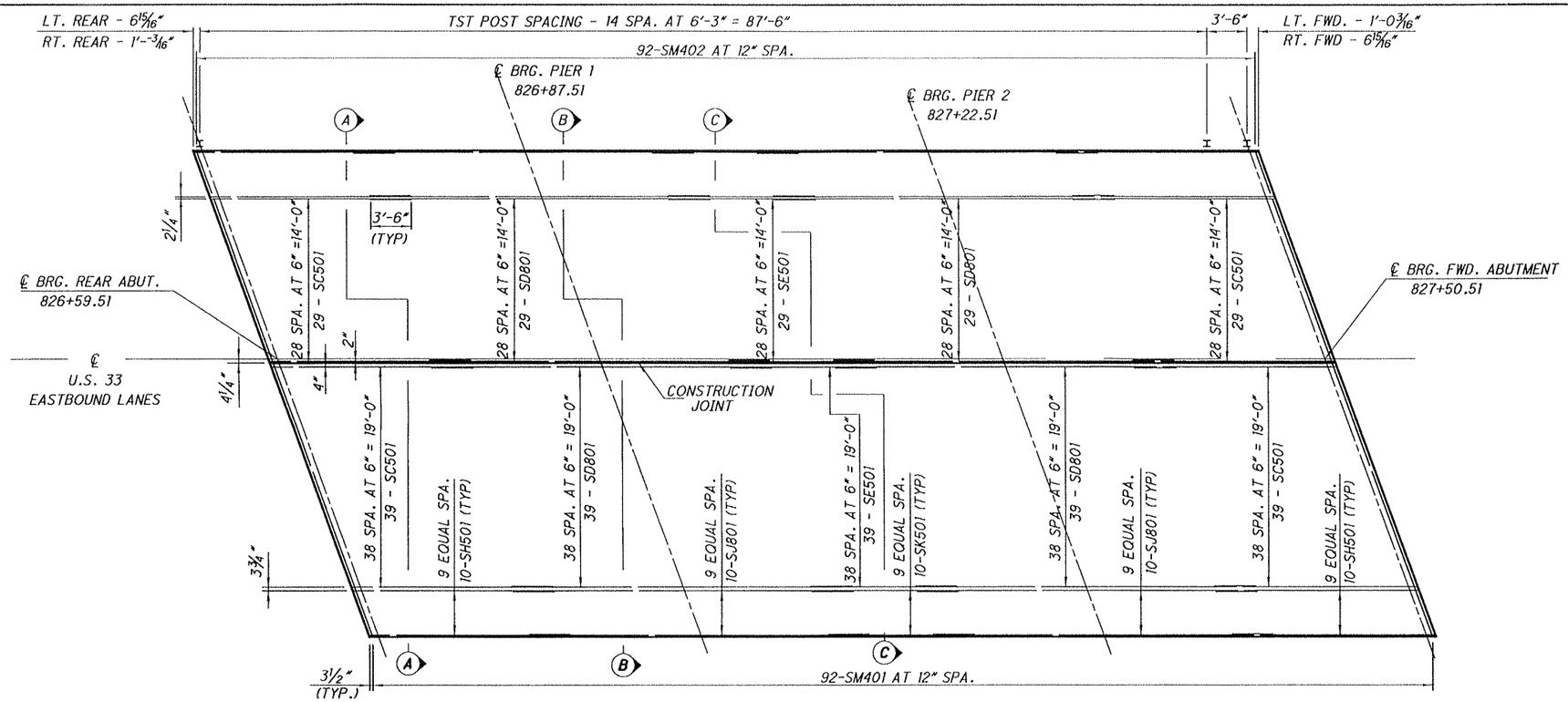

TOP LAYER OF STEEL

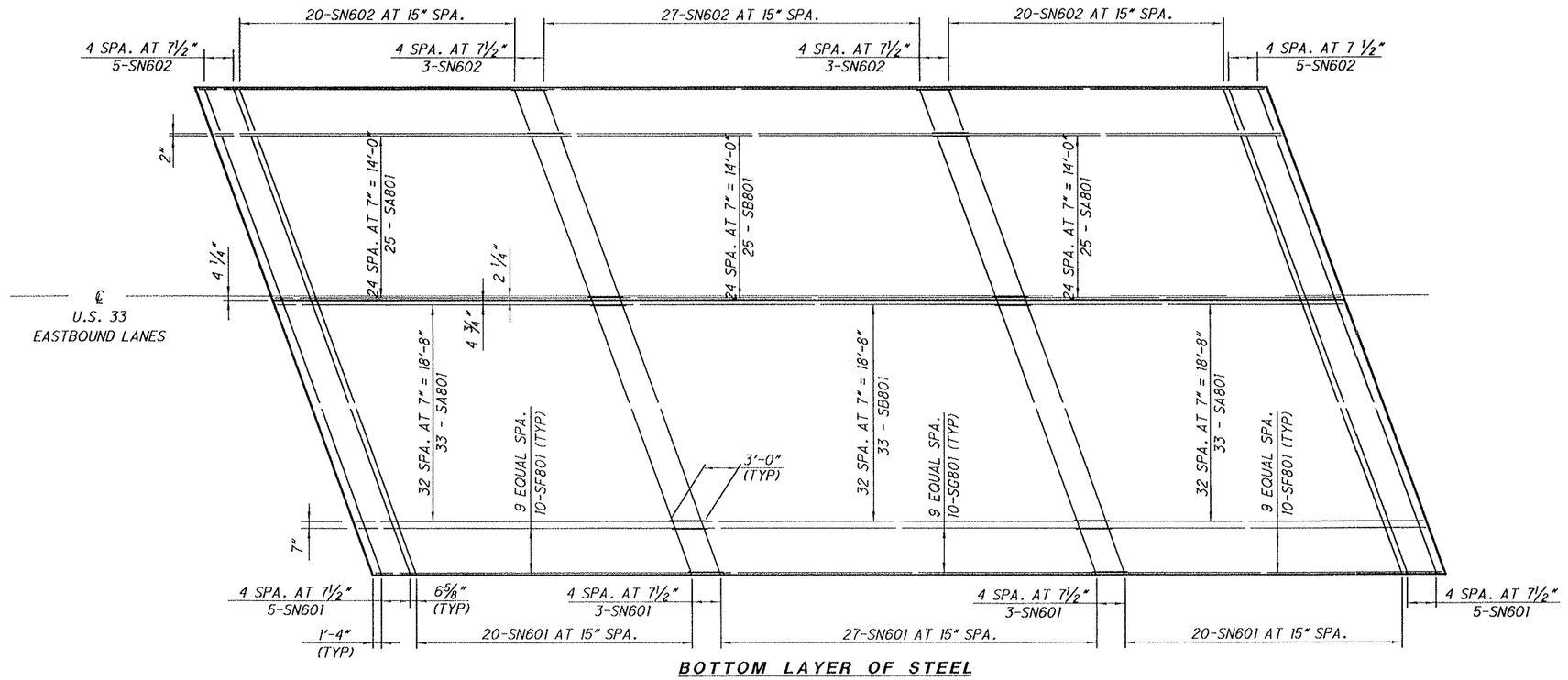

BOTTOM LAYER OF STEEL

DESIGN AGENCY
ENGINEERING DEPARTMENT
DISTRICT 10
MARIETTA, OHIO

DESIGNED	DRAWN	REVIEWED	DATE
JDC	JDC	JPH	7-15-12
CHECKED	REVISED	STRUCTURE FILE NUMBER	
WAB		3700868	

SUPERSTRUCTURE DETAILS
BRIDGE No. HOC-33-1513
OVER FIVE MILE CREEK

HOC-33-15.13
PID No. 87515

11 / 13

21 / 23

I:\project\HOC-33-15.13\79565\structures\H33151Sdeck.dgn 23-NOV-2012 10:12AM jcoen

NOTES:

1. SPA -SPACING
2. SEE SHEET 21 OF 23 FOR SECTION A-A, B-B & C-C LOCATIONS
3. SEE STANDARD DRAWING CS-1-08 FOR FURTHER DETAILS
4. S401 BARS SHALL NOT BE LAPPED WITH THE ADDITIONAL S601-BARS PROVIDED AT THE ABUTMENTS AND PIERS.
5. MIN. LAP SPLICE FOR: #4 BAR = 36", #5 BAR = 42", #8 BAR = 81".
6. REINFORCING STEEL IN TRANSVERSE DIRECTION SHALL BE PLACED PARALLEL TO SUBSTRUCTURE UNITS.

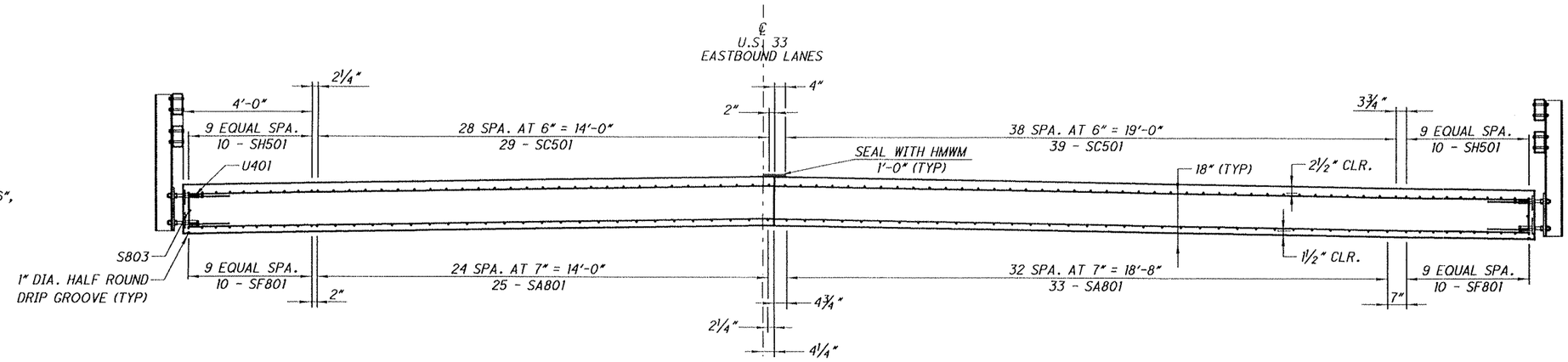

SECTION A-A

ITEM 517 - RAILING (TWIN STEEL TUBE)

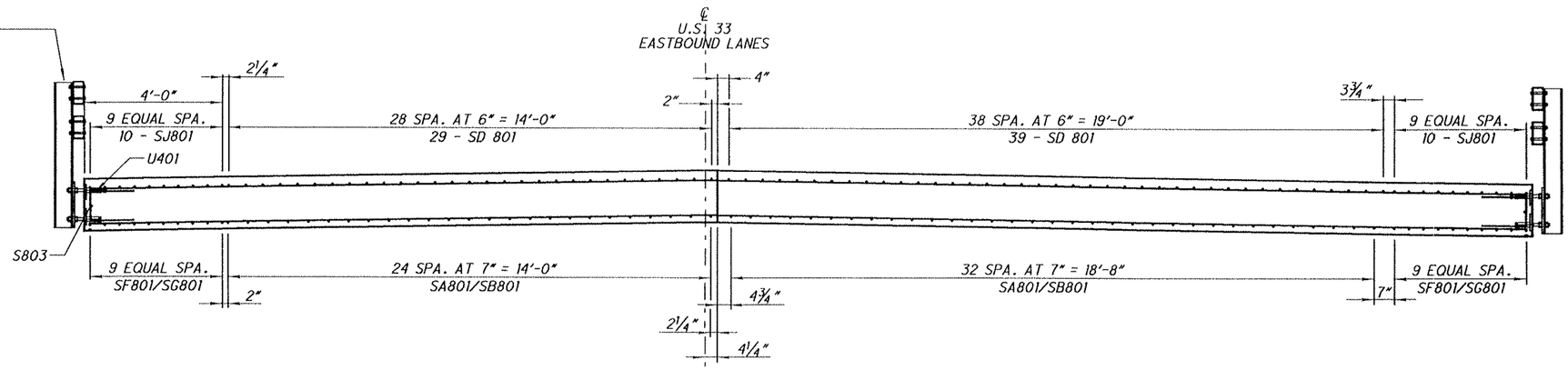

SECTION B-B
(OVER PIER)

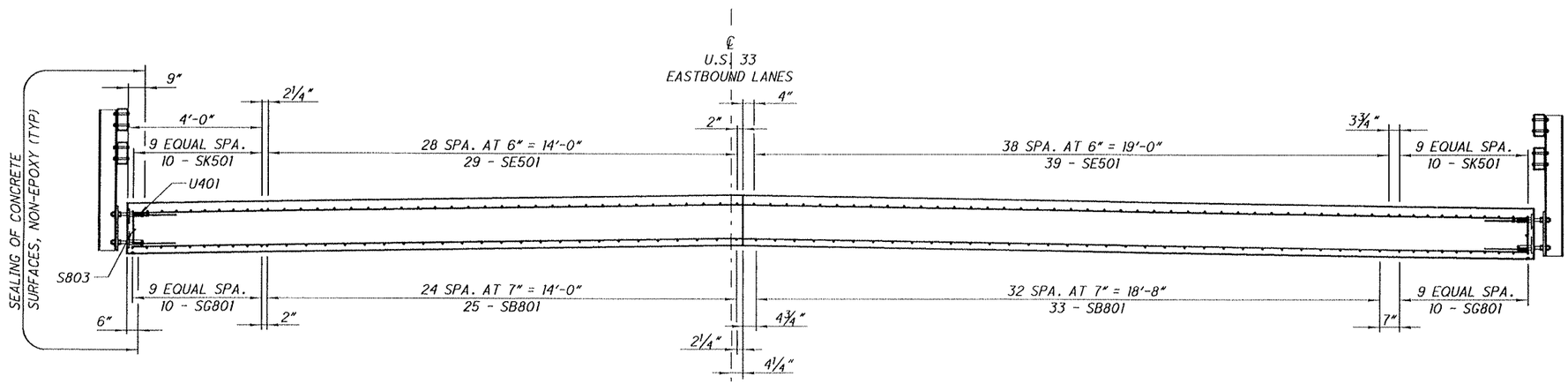

SECTION C-C

DESIGN AGENCY
ENGINEERING DEPARTMENT
DISTRICT 10
MARIETTA, OHIO

DESIGNED	DRAWN	REVIEWED	DATE
JDC	JDC	JPH	7-15-12
CHECKED	REVISED	STRUCTURE FILE NUMBER	
WAB		3700968	

SUPERSTRUCTURE DETAILS

BRIDGE No. HOC-33-1513
OVER FIVE MILE CREEK

HOC-33-15.13
PID No. 87515

12 / 13

22
23

I:\project\HOC-33-15.13\79565\structures\H33151.3deck.dgn 23-NOV-2012 12:09PM Jcoen

REINFORCING STEEL LIST

MARK	ABUTMENTS REAR	ABUTMENTS FWD.	NO.	LENGTH	WEIGHT	TYPE	A	B	C	INCR.
A401	18	18	36	8'-10"	213	3	1'-9"	2'-6"		
A501	52	52	104	10'-9"	1166	3	2'-8"	2'-7"		
A502	43	43	86	13'-7"	1219	3	1'-11"	4'-9"		
A503	9	9	18	19'-7"	368	3	1'-11"	7'-9"		
A504 *	5		5	33'-8"	176	STR				
A505	3		3	5'-7"	18	STR				
A506	3		3	6'-5"	20	STR				
A507 *	3		3	33'-0"	104	STR				
A508 *	2		2	32'-8"	69	STR				
A509	3		3	4'-7"	15	STR				
A510	3		3	3'-11"	13	STR				
A511 *	5		5	24'-11"	130	STR				
A512 *	3		3	25'-7"	80	STR				
A513 *	2		2	25'-11"	54	STR				
A514		3	3	5'-3"	17	STR				
A515		3	3	6'-0"	19	STR				
A516 *		5	5	27'-0"	141	STR				
A517 *		3	3	26'-4"	83	STR				
A518 *		2	2	26'-0"	55	STR				
A519		3	3	4'-11"	16	STR				
A520		3	3	4'-3"	14	STR				
A521 *		5	5	31'-7"	165	STR				
A522 *		3	3	32'-4"	102	STR				
A523 *		2	2	32'-7"	68	STR				
D801	28	28	56	4'-10"	619	18	3'-4"	1'-0"	1'-0"	
A801	48	48	96	3'-10"	983	17	2'-0"			
	1			33'-0"						
A802 *	S.O.			TO	356	STR				3"
	4			33'-8"						
	1			32'-8"						
A803 *	S.O.			TO	355	STR				4"
	4			33'-8"						
	1			24'-11"						
A804 *	S.O.			TO	271	STR				3"
	4			25'-8"						
	1			24'-11"						
A805 *	S.O.			TO	272	STR				4"
	4			25'-11"						
		1		26'-0"						
A806 *		S.O.		TO	283	STR				4"
		4		27'-0"						
		1		26'-3"						
A807 *		S.O.		TO	285	STR				3"
		4		27'-0"						
		1		31'-7"						
A808 *		S.O.		TO	343	STR				4"
		4		32'-7"						
		1		31'-7"						
A809 *		S.O.		TO	342	STR				3"
		4		32'-4"						
S501	88	88	176	6'-1"	1117	2	2'-5"	1'-6"	2'-5"	
S502	48	48	96	8'-2"	818	3	2'-0½"	1'-11"		
S503	4	4	8	9'-6"	80	3	2'-0½"	2'-7"		
S801 *	10	10	20	26'-11"	1438	STR				
S802 *	10	10	20	20'-7"	1100	STR				
			SUBTOTAL		12987	lbs.				

MARK			NO.	LENGTH	WEIGHT	TYPE	A	B	C
SLAB									
SM401 *			92	24'-11 ½"	1534	STR.			
SM402 *			92	19'-4"	1189	STR.			
U401			150	3'-4"	334	2	1'-3"	1'-0"	1'-3"
SC501			136	17'-3"	2447	STR.			
SE501			68	12'-7"	893	STR.			
SH501			40	17'-3"	720	STR.			
SK501			20	12'-7"	263	STR.			
SN601 *			83	24'-11 ½"	3112	STR.			
SN602 *			83	19'-4"	2411	STR.			
S803			6	33'-8"	540	STR.			
SA801			116	30'-11"	9576	16	30'-0"		
SB801			58	38'-0"	5885	STR.			
SD801			136	29'-6"	10712	STR.			
SF801			40	30'-11"	3302	16	30'-0"		
SG801			20	38'-0"	2030	STR.			
SJ801			40	29'-6"	3151	STR.			
			SUBTOTAL		48099	lbs.			
	PIERS								
	PIER 1	PIER 2	NO.						
P401	14	14	28	9'-3½"	174	3	2'-6"	2'-0"	
P501	30	30	60	9'-6"	595	6	2'-8"	2'-10"	0'-10"
P502	2	2	4	8'-7"	36	6	1'-9"	2'-10"	0'-10"
P503	2	2	4	4'-3"	18	2	0'-10"	2'-10"	0'-10"
P504	4	4	8	10'-9"	90	24	2'-6"	3'-5"	
P505 *	1	1	2	16'-3"	34	STR.			
P506 *	1	1	2	17'-4"	37	STR.			
P507 *	1	1	2	23'-8"	50	STR.			
P508 *	1	1	2	22'-9"	48	STR.			
P601 *	4	4	8	18'-11"	228	STR.			
P602 *	4	4	8	25'-3"	304	STR.			
P1101 *	1	1	2	16'-3"	173	STR.			
P1102 *	1	1	2	16'-7"	177	STR.			
P1103 *	1	1	2	17'-0"	181	STR.			
P1104 *	1	1	2	17'-4"	185	STR.			
P1105 *	1	1	2	23'-8"	252	STR.			
P1106 *	1	1	2	23'-5"	249	STR.			
P1107 *	1	1	2	23'-1"	247	STR.			
P1108 *	1	1	2	22'-9"	242	STR.			
			SUBTOTAL		3320	lbs.			
			TOTAL		64316	lbs.			

BENDING DIAGRAMS

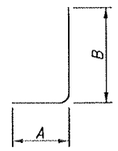

TYPE-1

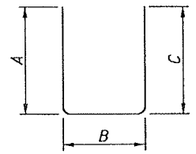

TYPE-2

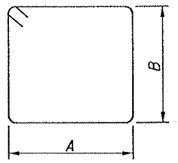

TYPE-3

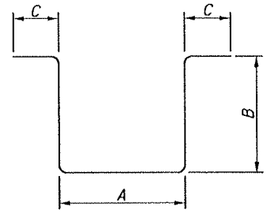

TYPE-6

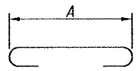

TYPE-17

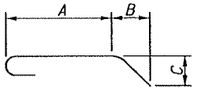

TYPE-18



TYPE-16

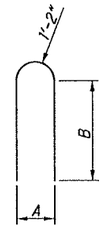

TYPE-24

REINFORCING NOTES:

1. THE BAR SIZE NUMBER IS SPECIFIED ON THE PLANS IN THE BAR MARK COLUMN. THE FIRST DIGIT WHERE THREE DIGITS ARE USED, AND THE FIRST TWO DIGITS WHERE FOUR ARE USED INDICATES THE BAR SIZE NUMBER. FOR EXAMPLE, S501 IS A NUMBER 5 BAR. R INDICATES INSIDE RADIUS, UNLESS OTHERWISE NOTED.

2. ALL REINFORCING STEEL SHALL BE EPOXY COATED.

3. "STR" IN THE TYPE COLUMN INDICATES STRAIGHT BARS.

4. REFER TO C.M.S SECTION 509.05 FOR STANDARD BEND DIMENSIONS.

* BARS WITH MECHANICAL CONNECTORS

DESIGN AGENCY
ENGINEERING DEPARTMENT
DISTRICT 10
MARIETTA, OHIO

DESIGNED JDC
DRAWN JDC
CHECKED WAB
REVIEWED JPH
DATE 7-15-12
STRUCTURE FILE NUMBER 3700968
REVISED

REINFORCING SCHEDULE
BRIDGE No. HOC-33-1513
OVER FIVE MILE CREEK

HOC-33-15.13
PID No. 87515

13 / 13

23
23

I:\project\HOC-33-15.13\79565\structures\H331513deck.dgn 06-DEC-2012 12:09PM Jcoen